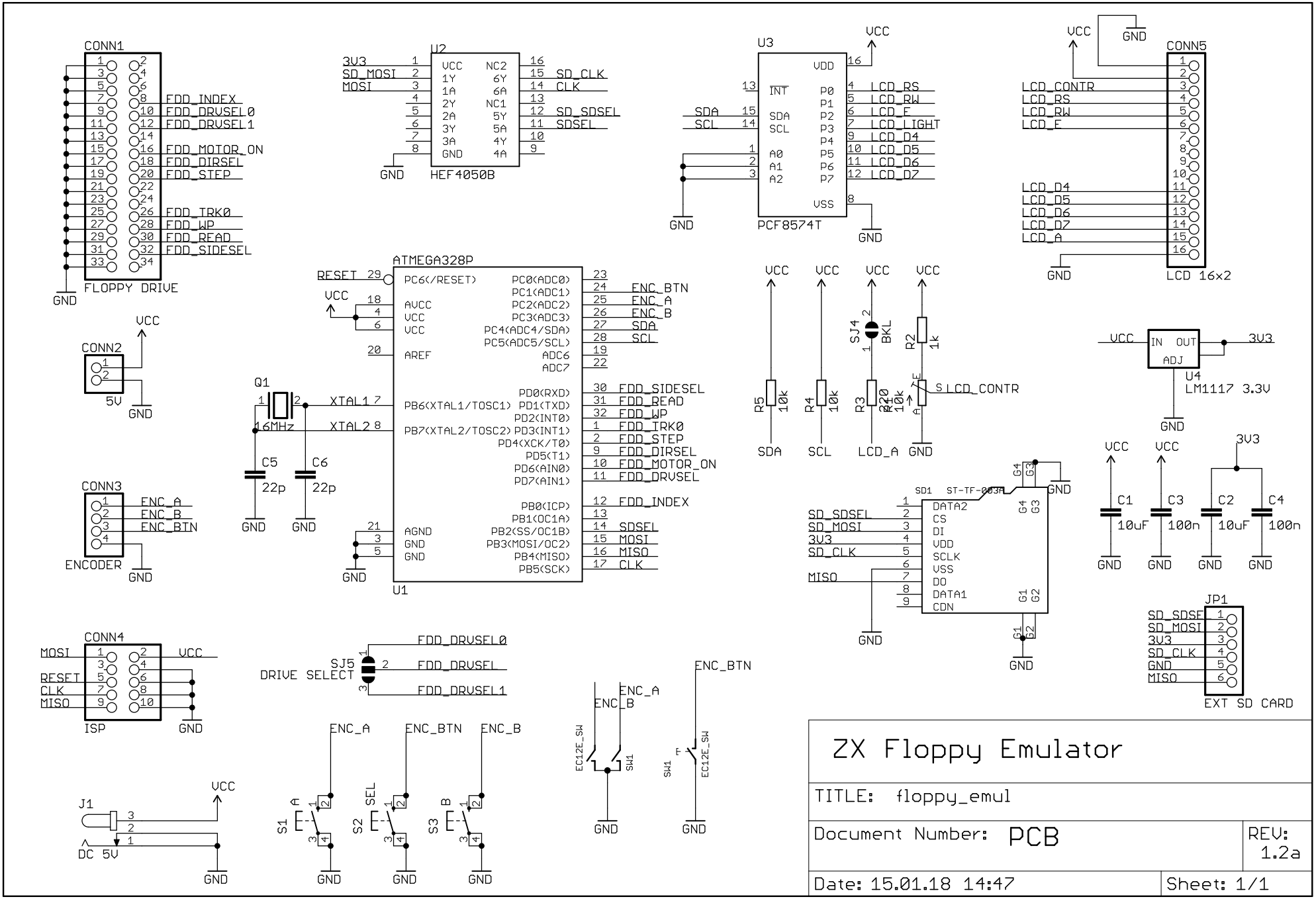

ZX Floppy Emulator

TITLE: floppy_emul

Document Number: PCB

REV: 1.2a

Date: 15.01.18 14:47

Sheet: 1/1